CrossTalk

Issue 61:08 61 Years Of Service To Our Community August 2020

2020 Club Officers

President :	**James Clark Sr, KA2OSV**
Vice President :	**Anthony Starr, K3TS**
Treasurer :	**Alan Arrison, KB2AYU**
Recording Secretary :	**John Zaruba Jr, K2ZA**
Corresponding Secretary :	**Ronald Block, NR2B**

Trustees - 4 year term

Robert Fields, KC6AOH	***(2017-2020)***
Charles Lanard, KD2EIB	***(2018-2021)***
James Wright, N2GXJ	***(2019-2022)***
Mark Gottlieb, KK2L	***(2020-2023)***

Board of Directors - 3 year term

Charles Colabrese, WA2TML	***(2018-2020)***	**Jeffrey Welsh, KD2AZI**	***(2019-2021)***
William Price, NJ2S	***(2018-2020)***	**Robert Durham, W2RAD**	***(2020-2022)***
Jeffrey Garth, WB2ZBN	***(2019-2021)***	**Herb Dyer, KT2Y**	***(2020-2022)***

This Month's Calendar

General Membership ZOOM Meeting
Wednesday, August 5, 2020 @ 1930 Hours

Tech Saturday Forum
Saturday, August 8, 2020 @ 0900 Hours
***** CANCELLED *****

10 Meter Swap Meet
Saturday, August 8, 2020 @ 2000 Hours
Tune-In on 28.465 MHz or 28.475 MHz

VE License Testing Session
Thursday, August 13, 2020 @ 1900 Hours
***** CANCELLED *****

Board of Directors Meeting
Wednesday, August 19, 2020 @ 1900 Hours
***** In-Person or On-Line via ZOOM *****

10 Meter Rag Chew Net
Every Monday @ 2000 Hours
Tune-In on 28.465 MHz or 28.475 MHz

2 Meter Rag Chew Net
Every Thursday @ 2000 Hours 147.180 MHz
EchoLink : W2MMD-R

Inside This Issue…

President's Message

Dear Fellow Members;

Here it is August already, the year is more than half over with still no end insight to COVID 19. There is no word, as of yet, as to when we can expect to resume our General Membership Meetings at the Pfeiffer Community Center. However, we will continue to hold our monthly meetings via ZOOM, so look for an e-mail each month giving you the Meeting ID # and the Password.

I was very well pleased with the turnout for Field Day this year. We actually had more stations on the air this year then several years in the past. Everyone chipped in and helped with the workload getting each station set up. All stations were on the air by 1400 Hours. I would like to take this opportunity to thank everyone who participated. I look forward to Field Day 2021 and hopefully seeing even more members taking an active role in this very important event.

The Board of Directors have decided to reschedule the **Club Picnic** until **Sunday, 11 October 2020**. The picnic will be held at the **Clubhouse Site** at 1200 to 1500 Hours. Come One, Come All. The picnic is open to friends and family alike. Don't forget to bring a chair. MASKS are optional.

We will be holding off until the last week prior to the Hamfest before making a final decision whether or not to go ahead or cancel the event. The Hamfest is scheduled for **Sunday, 13 September 2020**. A decision will be made on **Tuesday, September 8, 2020**. A lot will depend on what Gov. Murphy will allow at that time.

VP Tony Starr, K3TS, will be hosting a CW training class with the help of the **CW Operators Club** and their **CW Academy**. See Tony's article on page 6 for more information. Also go to our website, on the **K3TS CW Training Class** page to sign-up to take his class.

That's it for now. I hope to see you all in the pile-ups.

Be Healthy, Be Strong, es Above All, Be Safe

73 es God Bless Us All.

JIM CLARK, USN (Ret.)

KA2OSV

Old Salty Veteran

President GCARC

"Ask not what your Club can do for you, Ask what you can do for your Club"
- KA2OSV

Wednesday, August 5, 2020 General Membership ZOOM Meeting

1930 Hours

The meeting host will send an e-mail with log-in instructions to all members

Sheldon Parker, K2MEN will asking for volunteers for the 2020 Hamfest

Fox Hunt XVII - *Stay In Your Car!!!*
Saturday, August 29, 2020 - 1300 - 1400 Hours

The basic idea of ***The Stay In Your Car Fox Hunt*** is to simply putting the micro-fox transmitter on the roof of a nice air conditioned car, and let people find it in whatever parking lot the ***FOX*** is in. This way everyone can participate, simply by stronger/weaker homing in without having to exit their car. And we can laugh at and taunt each other through our repeater, as the hunt progresses.

Maybe it's a nice way to break up the stuck-at-home monotony.

For those that have not tried one of these fox hunts before, the idea is simple, and is quite fun. You can even bring the whole family along. It goes something like this.

A day before the hunt, the ***FOX*** will send an email to the Club reflector. In it, he will give directions that will narrow down search area we have to hunt in to something no larger than approximately 4 square miles, here in southern NJ. Then, by 1 pm on August 29th, we drive into that area, and wait to hear from him on the W2MMD 2 Meter repeater (147.180 MHz PL Tone 131.8 Hz) asking for check-ins. You can also check-in using EchoLink : W2MMD-R. Each car full of us will check in with him on the repeater, so that he'll know who all is hunting, and can give clues if anyone gets lost. Then the transmitter is turned on, and the hunt begins!

By using a "warmer / colder" technique, where the signal is strongest when you are closer, and weaker when further away, or any technique of your choosing, the idea is to find the transmitter within an hour. If anyone is still searching after an hour, he'll talk us all in using the Club's repeater, so that all hunters will have the chance to meet up with him and laugh about our adventures!

The transmitter is a Byonics MicroFox 15. It has an approximate transmitting range of 1 mile radius. The hunt frequency is 146.565 MHz. The transmission mode is FM simplex. When you are getting close to the transmitter, you can switch to 439.695 MHz, which is the third harmonic, to get a better read on its location. Hunters are encouraged to team up together, as it is a great event to partner up with non-ham family members who can help drive while you home-in on the signal using your radio. So, who's ready for a fun fall fox hunt! See you out there!

Tech Saturday Forum
August 8, 2020 @ 0900 Hours
*** CANCELLED ***

Open Discussion Of All Amateur Radio Related Topics

We would like to invite all of our new members as well as our veteran members to our Tech Saturday Forums to help answer any questions and discuss any and all issues the new members have come across as they progress through the ***Amateur Radio Experience.***

The Discussion Theme is a QSO starting point - a way to initiate a conversation. All Tech Saturdays are an open QSO of all subjects of Amateur Radio interest.

All questions are welcome as well as a venue for hams to show off their latest ham radio projects or gadgets. Have a problem programming that HT, we can help! Not sure what radio or antenna to buy, we can help!

All Club Members who would like Clubhouse access to use its radio equipment would have to have some brief "Elmering" on the Clubhouse rules, such as using the alarm system, the A/C and heaters, the antenna system, and the radio equipment.

All are welcome - Hams and Non-Hams - Club Members and Non-Club Members. Take a guided tour of our Clubhouse. Visit our HF and VHF/UHF/Satellite Operation Facilities and our vast antenna farm.

As always, refreshments and snacks will be served at every Tech Saturday.

The Tech Saturday Forum is held on the Saturday after the General Membership meeting.

Tuesday, August 4, 2020

Sunday, August 23, 2020

Best Down Jersey DX Picks

August 2020

By Bill Grim, W0MHK

CALL	DATES	HIGHLIGHTS	DIFFICULTY (5=MOST RARE)	ENTITY
P4	08/02 - 08/08	HF/SSB	1	Aruba
9G5GS	08/08 - 09/15	HF/SSB, FT8	2	Ghana
V47JA	08/22 - 09/05	160-6M/SSB, FT8	1	Saint Kitts & Nevis
XR0YHM	08/27 - 09/07	80-10M/SSB, Digital	2	Easter Island

Down Jersey DX Extra! : ***COVID 19 is still playing havoc with DXpeditions and portable operations. There is still some DX and stateside life on 10 and 12 Meters. Take a listen once in a while to those bands this hot summer. No new ones for me on 6 Meters so far in 2020, but I have managed to work 20 DXCC countries using FT8 on the band. How has your 6 Meter Season been this year????? (Drop a note to w0mhk7388@aol.com.)***

Credits : NG3K Announce DX Operations : www.ng3k.com/Misc/adxo.html

Entity Of The Month : Aruba

Aruba is an island and a constituent country of the Kingdom of the Netherlands in the southern Caribbean Sea, located about 620 miles west of the main part of the Lesser Antilles and 18 miles north of the coast of Venezuela. It measures 20 miles long from its northwestern to its southeastern end and 6 miles across at its widest point. Together with Bonaire and Curaçao, Aruba forms a group referred to as the ABC islands. Collectively, Aruba and the other Dutch islands in the Caribbean are often called the Dutch Caribbean. Aruba is one of the four countries that form the Kingdom of the Netherlands, along with the Netherlands, Curaçao, and Sint Maarten; the citizens of these countries are all Dutch nationals. Aruba has no administrative subdivisions, but, for census purposes, is divided into eight regions. Its capital is Oranjestad. Unlike much of the Caribbean region, Aruba has a dry climate and an arid or desert, cactus-strewn landscape. This climate has helped tourism as visitors to the island can reliably expect warm, sunny clear skies year-round. It has a land area of 69.1 square miles and is densely populated, with a total of 101,484 inhabitants at the 2010 Census. Current estimates of the population place it at 116,600 (July 2018 est.) It lies outside Hurricane Alley. There has been a human presence on Aruba from as early as circa 2000 BC. The first identifiable group are the Arawak Caquetío Amerindians who migrated from South America about 1000 AD. Archaeological evidence suggests continuing links between these native Arubans and Amerindian peoples of mainland South America. The first Europeans to visit Aruba were Amerigo Vespucci and Alonso de Ojeda in 1499, who claimed the island for Spain. Both men described Aruba as an "island of giants", remarking on the comparatively large stature of the native Caquetíos. Vespucci returned to Spain with stocks of cotton and brazilwood from the island and described houses built into the ocean. Vespucci and Ojeda's tales spurred interest in Aruba, and the Spanish began colonizing the island. Alonso de Ojeda was appointed the island's first governor in 1508.

www.wikipedia.org/wiki/Aruba

Learning "The Code"

By Tony Starr, K3TS

I was recently perusing the Club's archives, when I discovered that one of the first motions made by the brand new GCARC, way back in 1959, was to establish a Morse Code Training class. This of course was a requirement for licensing in those days, and while it has not been a requirement in a number of years, a recent incident made me think that this very old idea for the Club, might be a good one now. Recently on Field Day, we had a severe shortage of CW operators. Perhaps a code training class might help to mitigate the risk of such an occurrence in the future.

Since I am a member of the **CW Operators Club (https://cwops.org),** a worldwide ham radio fraternity, I have available to me some of the best code training tools and resources available. I contacted Kate Hutton, K6HTN; and Joe Fischer, AA8TA, who run the world famous and popular **CW Academy (https://cwops.org/cw-academy)**, which is arguably the greatest thing that the CW Ops club does, and was introduced to a wide range of modern and efficient code learning tools and software, including programs for individual learning, group instruction, and practice sessions, and I came away convinced that learning "the code" has never been easier. They even offered to make me a "CW Advisor", something which I am probably not qualified to be, but it would mean that I could run my own class.

I am very excited now about sharing this new-found opportunity with my friends in GCARC. If you have always wanted to learn the code, and operate CW, this is a great opportunity. I will be able to set up individual online instruction, group sessions via Zoom or Skype, or a combination of both. I am hoping to get a group together from our Club to take on this challenge. With the modern learning tools, it will likely be a lot easier to learn than you ever thought it would be. And since it has been proven that those students who actually get on the air and operate CW tend to do better than those who do not, we will probably set up some kind of code practice net on the air. And once you get the basics nailed down, CW Academy offers several intermediate and advanced levels of training, so that you can become a genuine CW ace, whom I can recruit for Field Day CW duty!

For years I wished that I could be a good CW operator, but only in the past three or four years have I felt that I was finally on the right track. Now with my friends at the CW Academy, I would like to extend the invitation you, to my fellow GCARC members, to join me on that path. If you have wanted to learn the code in the past, or just want to do it now, this is your chance.

Please contact me via e-mail **(tstarr1450@gmail.com)** or submit your name, call sign, and e-mail address on the sign-up form on the **K3TS CW Training Class** page on our website and I will get you on the list for this upcoming session.

Operating CW is a lot of fun, and the better you get, the more fun it is.

Don't delay, sign up today! 73.

ARRL Ham Radio License Exam Practice Website
www.arrlexamreview.appspot.com

Southern New Jersey Section Update

By Tom Preiser, N2XW

I hope everyone has made it through Field Day. There were some clubs in Southern New Jersey who got together for Field Day while others worked from home. Some Clubs reported they had more club participants working from home than would normally participate,

Many Clubs have also resumed VE Testing using precautions. I think if everyone does this, VE Testing can resume. Still many clubs are meeting on repeaters or via Zoom meetings. There are some meetings taking place outdoors and again as long as social distancing is in place, this is fine.

Field Day 2020 is Shaping Up to be One for the Record Books

ARRL Contest Program Manager Paul Bourque, N1SFE, reported that ARRL has received more than 8,700 online Field Day entries by mid-week, and paper-only entries have started arriving too.

"As many participants chose to operate from home this year - and given the 2020 rules waivers, we have seen a tremendous increase in entries over last year's event," Bourque said. "Most of the entries received have been through the online web app, and Headquarters staffers have begun processing the paper entries this week. The 2020 waivers allowed individual club members to attribute their scores to their clubs."

Participants who submitted entries online are encouraged to check the Field Day entries received page to verify that their entries are marked as complete, and that the club name entered is correct. Entries with a status of "pending" are incomplete entries that are missing one or more items, and these need to be completed for an official entry. Share your stories and photos using the ARRL soapbox or via social media, such as on the ARRL Field Day Facebook group.

Introducing The ARRL Current

ARRL has a new way to let members know when the digital editions of QST and other publications are available. Distributed via email, The ARRL Current offers a monthly overview of ARRL publications and member benefits. The inaugural edition launched in June.

Subscribe now to receive each issue going forward. Manage your email preferences from your ARRL account (members must first be registered on the ARRL website).

Go to the Edit Email Subscriptions page, select The ARRL Current, and then click Save.

Check out the ARRL Store for some New ARRL Summertime Shirts and accessories.

73s
Tom Preiser, N2XW
ARRL Southern New Jersey Section Manager
n2xw@arrl.org

DA's and DIT's

Gary Reed, N2QEE, reports : There will no VE sessions at the Franklinville Library until further notice. The group has been working on a possible solution for VE testing at the Hamfest.

Al Arrison, KB2AYU, reports : He hauled away the concrete blocks at the Clubhouse site. He said it took three trips to haul them all away. Thank you, Al! Another task to be removed from the 2020 Clubhouse Projects list!

Chuck Colabrese, WA2TML, reports on a limited space HF antenna. It looks simple to construct and doesn't require a balun or matching transformer like the EFHWs. And since it is fed close to one end, it could possibly be used in place of an EFHW. Go to :
http://www.g7fek.co.uk/software/G7FEK%20antenna.pdf

2020 Field Day Observations :

Curt Myers, K2CWM, reports : *"I just stayed home on FD and made a few contacts running 5 watts straight-key CW off a battery (1E SNJ) using an IC-703 into a vertical. Made 57 contacts, 30 sections. Sent log info to NAQCC."*

A BIG GCARC Thank you to Dave Christian, KB3VEO, who cut the grass in the back lot for Field Day and for using his bucket truck to help install the new satellite antennas. In my opinion, any Club member with a bucket truck should get a honorary Life membership HIHI!

Our favorite wine festival is still scheduled for August 22-23, 2020. Keep an eye out to see where they setup.

2 Meter Rag Chew Net
147.180 MHz Repeater
EchoLink : W2MMD-R
Every Thursday @ 2000 Hours

This net has an alternating net control operator
Here is a list of the net dates and control operators

July 30, 2020 : Gary Mirkin, WA3SVW
August 6, 2020 : Jeff Garth, WB2ZBN
August 13, 2020 : Greg Ciraula, W5DO
August 20, 2020 : Mary Delemarre, KD2PLH
August 27, 2020 : Steve Farney, WB2VFJ
September 3, 2020 : Gary Mirkin, WA3SVW
September 10, 2020 : Jeff Garth, WB2ZBN
September 17, 2020 : Greg Ciraula, W5DO
September 24, 2020 : Mary Delemarre, KD2PLH
October 1, 2020 : Steve Farney, WB2VFJ

If anyone would like to be a net control operator, please notify Jeff WB2ZBN.

Please sign-up to volunteer to help out at the 2020 Hamfest
Go to our website on the 2020 Hamfest Sign-Up Sheet page
You can select from a variety of tasks or select "Other (I just want to help)"
Club members volunteering is what makes our Hamfest the best one in the region

2020 Hamfest Volunteer Sign-Up Sheet

Enter your contact information at the bottom of the page, with your name, callsign, phone number, activity selection, any comments you may have, and click the SUBMIT button

Thank you for volunteering!

2020 Hamfest Volunteer Sign-Up Sheet

Activity	**Site Set Up**
Date & Time Needed	Saturday, September 12th from 1800 to 2000 Hours
Activity Description	Estimate 10 people needed to move tables, line spaces, set up/test PA system, set up trash cans, etc.
Activity	**Overnight Security**
Date & Time Needed	Saturday, September 12th from 2000 Hours
Activity Description	One person needed for overnight security of site.

Name *
First Last
First Last

Callsign *

Cell Phone *

Choose the volunteer activity : *

- ☐ Site Set Up
- ☐ Overnight Security
- ☐ 2 Meter Talk-in
- ☐ Gate Attendants / Ticket Takers
- ☐ Parking Attendants
- ☐ ARRL Programs Support
- ☐ 50 - 50 Ticket Sales
- ☐ Announcer / MC / Prize Awards
- ☐ Vendor Assistants
- ☐ Site Clean-Up
- ☐ Other (I just want to help)

Comments

Submit

Social Distancing A Digital Station Over Local Wi-Fi For Field Day

By Jim Wright, N2GXJ

It was a practical problem to solve. Radio field day would not be like field days of the past, where shifts of operators would take turns sitting at a table, sharing a microphone for voice contacts, and touching the same keyboards for making digital contacts and for logging of all contacts into a logging program during the 24 hour event. Leading up to field day we pondered, what options did we have? We would be out in a field, on emergency power, with no internet. We would want to share a radio without having to have people touch the radio or ever be in close proximity to each other. Would that even be possible?

A few options were considered. For example, we could use disposable plastic covers (but could we type through them? And what about the tuning knob, and the band and mode select buttons on the radio itself?) We then suggested we could spray and wipe everything down between operators (but would that wipe off the letters on the keyboard, and on the radio faceplate? Nobody wanted that.). Maybe we could we have everyone bring their own microphones and keyboards (Most everyone had their own laptop for logging, sure, but would everyone have the right microphone to bring to use with the radio?). Nothing seemed ideal. What were we going to do?

Then a thought occurred. Maybe we could do something different than what we'd done for field day in the past. Maybe we could consider using some new technology to help solve this.

It started with switching from using an "old tried and true" radio, with its familiar touch dials, and touch buttons, to using one of the new software defined radio (SDR) that has an Ethernet port instead for all of this. Conceptually, this would allow us to use a long Ethernet cable to pass audio and radio control back and forth between the radio and a laptop at the other end of the cable, without risk of having anyone have to physically touch the radio after it would be set up by the owner.

We'd run software provided by the SDR manufacturer on the laptop to control the radio TX/RX, frequency, and mode over the Ethernet connection. The same software would open audio connections between the laptop and the radio, allowing bi-directional audio to be transferred over the Ethernet cable. We'd each bring our own laptop.

If we wanted to make a voice contact, we'd plug our own USB headset into our laptop. To make a digital contact, we'd run WSJT-X, or another digital program on the laptop. RX audio from the radio would come over the Ethernet to software on the laptop, where it could then either be listened to on the USB headset (if operating voice), or be used as an input audio source to WSJT-X. In the TX direction, the microphone on the USB headset could be used as the source of the audio to transfer to the radio over the Ethernet cable (if operating voice), or the software could be configured to take digital TX audio from WSJT-X and send that to the radio over the Ethernet instead.

With this basic setup on Ethernet cable working, we then decided to try and go one step further, which was to ditch the Ethernet cable, and try and go wireless instead. So that's what we did. And it worked!

Here's a simple diagram of the setup, along with a picture to illustrate the simplicity of the configuration. Wi-Fi, Antenna, and power plug into the radio box. Then laptop is used to access the radio wirelessly over the Wi-Fi. That's it!

Social Distancing Field Day Digital Station - Continued on page 11

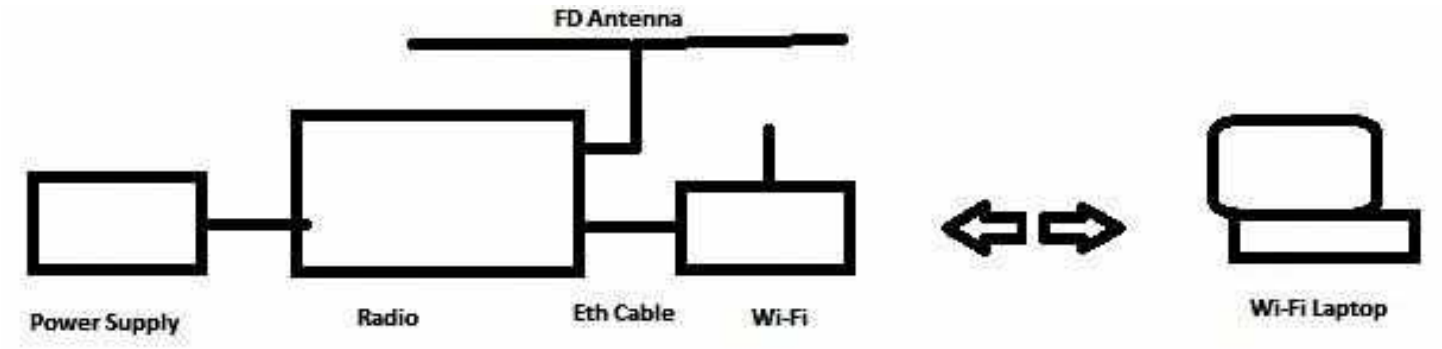

Social distancing a digital station over local Wi-Fi for Field Day

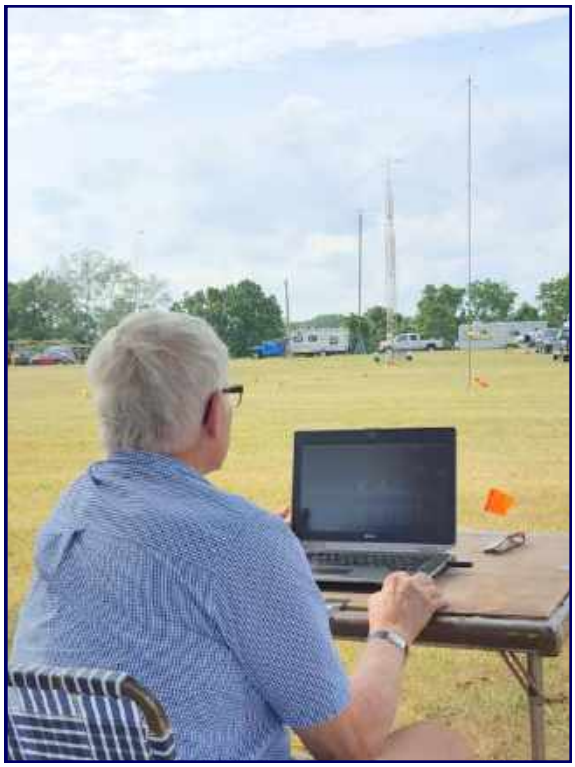

There was one "trick". And that was figuring out how to get the Wi-Fi router we'd brought from home to work in the field to bridge between the Ethernet cable plugged into the radio, and the laptop over Wi-Fi. Things worked fine with the Ethernet cable direct between the radio and the laptop, but plug the Ethernet cable from radio into the Wi-Fi router, and then connect the laptop over Wi-Fi to the router, and the laptop could not see the radio to connect to it.

A Google search on cell phone quickly identified the problem, and solution. Problem was the home Wi-Fi router expects an Internet connection, and there is none in the field. Fix is to use the admin menu to configure the router as a Wi-Fi hub, to allow communications to pass freely between the Ethernet ports on the device, and Wi-FI, which we did, and then it worked just fine.

It was great to be able to find a way to do field day out in the field this year. Would love to hear from others about creative solutions you may have tried, to compare.

Regional (Atlantic & Hudson Divisions) Hamfests & Events

August 1, 2020 : Tompkins County Amateur Radio Association, Ithaca Hamfest, Trumansburg Fairgrounds, 2150 Trumansburg-Ithaca Road, Trumansburg, NY. **www.tcara-ny.org** ***** CANCELLED *****

August 8, 2020 : Uniontown Amateur Radio Club, Uniontown ARC Gabfest, Uniontown Amateur Radio Clubhouse, 433 Old Pittsburgh Road, Uniontown, PA. **www.w3pie.org** ***** CANCELLED *****

August 8, 2020 : Reading Radio Club, Reading Radio Club Hamfest, Heritage Park, 992 Clematis Street, Sinking Spring, PA. **www.qsl.net/w3bn**

August 11-15, 2020 : Antique Wireless Association Annual Conference, RIT Inn & Conference Center, 5257 West Henrietta Road, Henrietta, NY. **www antiquewireless.org** ***** CANCELLED *****

August 15, 2020 : Ramapo Mountain Amateur Radio Club, RMARC 42nd Annual Hamfest, Saint Catherine RC Church, 112 Erskine Road, Ringwood, NJ. **www.qsl.net/rmarc**

August 15, 2020 : Keuka Lake Amateur Radio Association Hamfest, Howard Community Center, 7481 Hopkins Road, Avoca, NY. **www.klara.us**

August 29, 2020 : East Greenbush Amateur Radio Association Hamfest, East Greenbush Volunteer Fire Department, 68 Phillips Road, Rensselaer, NY. **www.egara.club** ***** CANCELLED *****

August 29, 2020 : ROC City Net Hamfest, The Log Cabin Restaurant, 2445 West Walworth Road, Macedon, NY. **www.roccitynethamfest.com** ***** CANCELLED *****

August 30, 2020 : Skyview Radio Society Swap N Shop, Skyview Radio Society Clubhouse, 2335 Turkey Ridge Road, New Kensington, PA. **www.skyviewradio.net**

QSO Today Virtual Ham Expo
August 8 and 9, 2020
www.qsotodayhamexpo.com

Need a ride to a Club meeting, event, or activity?

Just send a message to the Club's e-mail reflector asking if a member can pick you up

GCARC <*at*> MAILMAN <*dot*> QTH <*dot*> NET

All Club members have access to this FREE e-mail service

When Two Hobbies Collide...Comet Hunting!

By Dan McCormick, KD2TUS

I am a new ham as of April and was lucky to sit in on one of the virtual VE Sessions with a club from New England and I am now a new Technician. For those who don't know, we've had a great morning show of comet C/2020 F3 (NEOWISE).

Being new to the GCARC Club, I haven't been to any in person meetings yet. Seeing that Clubhouse was on such a big field, this makes for a perfect spot to view objects low to the horizon and Comet Neowise (Neowise for short) is just that; rising only about 6 degrees high.

Astronomy has been a hobby of mine for a long time and I am part of a few area clubs. Neowise is one of those comets that has been putting on a great show. For those who don't know, Neowise is the name of the space-telescope that discovered the comet.

The NEOWISE mission was spun off of the WISE mission. WISE ran out fluids and could no longer operate at extremely low temperatures. When this happened, the mission was repurposed to look for asteroids and every now and again will find a comet. This is how Neowise came about. These missions are funded by NASA's Planetary Science Division.

Not too often do comets become 'naked eye' meaning you need no astronomical aid to view them. Neowise was discovered back in March as the pandemic was coming to fruition. By the way, that's where the ' 2020 F3' designation comes from - 2020 (year discovered), F designates the second half of March and 3 is the 3rd comet discovered for that month.

You are able to spot comet Neowise around 4:35am in the North East sky. Look for the bright star Capella and the comet will be to the bottom left of this star.

I have yet to observe a comet and I couldn't think of a better one to start with! Neowise is still hanging around early morning if you are up before the Sun however chances to see it are reducing. It is projected to last the remaining of the month (July). This comet could potentially brighten up during the early evening sky in the North West direction after sunset through midnight before going below the horizon at the time of writing this article. Although comets are very unpredictable, projections have the comet to fade after the 22 of July. If you are at all curious about Neowise or would like to observe it, feel free to shoot me an email KD2TUS@gmail.com.

73 and Clear Skies!

KB6NU's Ham Radio Blog

Tech Classes Move Online

By Dan Romanchik, KB6NU

I've been teaching ham classes for more than a dozen years now. My specialty has been the one-day Tech class. In this type of class, you review all of the questions in the question pool with the students over the course of six to eight hours, and then immediately give them the test before they can forget anything.

I would hold these classes three or four times a year and regularly have 20 - 30 students in each class. The pandemic, of course, has put the kibosh on these classes. The last one I taught was in January.

Frankly, I was wondering if I'd ever teach one again. A little over a month ago, however, I was approached by a fellow in Portland, Oregon about teaching an online class for some folks that he'd corralled there. After giving it some thought, I said yes.

So, now, in place of face-to-face classes, I'm teaching online Tech classes. There are plusses and minuses to this approach One negative is that I miss the face-to-face interaction with the students. On the plus side, teaching online allows me to offer classes more frequently. My first was in June. Last week, I completed the second class, and in August, I will teach a third class.

I have had to make some changes to the format. Making people sit in front of a computer for six hours or more seemed like cruel and unusual punishment. So, instead of a one-day class, the online class consists of four, two-hour sessions, spanning two weeks :

- **Session 1**
  - **Electrical Principles**
  - **Electronic Components and Circuit Diagrams**
- **Session 2**
  - **Radio Wave Characteristics**
  - **Antennas and Feed Lines**
- **Session 3**
  - **Amateur Radio Signals**
  - **Electrical Safety**
  - **Amateur Radio Practices and Station Setup**
- **Sessions 4**
  - **Station Equipment**
  - **Operating Procedures**
  - **Rules and Regulations**

KB6NU's Ham Radio Blog - Continued on page 15

KB6NU's Ham Radio Blog - Continued from page 14

This seems to be working out pretty well. I'm using Zoom, and most people have been able to attend without too much hassle. To simulate the whiteboard that I use extensively in the face-to-face class, I'm using the Autodesk Sketchbook program **(https://www.sketchbook.com)** and sharing my screen with the Zoom meeting attendees. To write on the "whiteboard," I'm using a Gaomon M10K2018 drawing tablet.

Sketchbook allows me to build up a document in layers, and the result is kind of a hybrid PowerPoint presentation and whiteboard. I can make layers appear when I start discussing a particular topic and then write over them. For example, when I go over the questions that use Ohm's Law to calculate current in a circuit, I display the later with **"E = I x R"** and on a second layer, show how to calculate the answers to the questions

To take the test, students have to sign up for an online test session. Fortunately, several VE groups are offering online, remote testing. To sign up for one of these sessions, all students have to do is go to **https://hamstudy.org/sessions**. For the first two classes, the W5YI VEC scheduled a special test session.

I foresee teaching these classes monthly until the demand wanes. The next class will start on Monday, August 3. To register for the class, go to **https://www.kb6nu.com/product/next-online-tech-class**. To find out when these classes will take place in the future, potential students can sign up for my mailing list by going to **https://landing.mailerlite.com/webforms/landing/m6l6t4**.

==========

Dan Romanchik, KB6NU, is the author of the KB6NU amateur radio blog (**KB6NU.Com**), the "No Nonsense" amateur radio license study guides (**KB6NU.Com/study-guides**), and often appears on the ICQPodcast (**icqpodcast.com**). When he's not teaching ham radio classes, he likes to operate CW on the HF bands, go for long walks around Ann Arbor, MI, and volunteer for Rotary Club service projects.

Maximilian Kolbe, SP3RN
Patron Saint of Amateur Radio Operators

Saint Maximilian Maria Kolbe : (January 8, 1894 - August 14, 1941) was a Polish Conventual Franciscan friar who volunteered to die in place of a stranger in the German death camp of Auschwitz, located in German-occupied Poland during World War II. He was active in promoting the veneration of the Immaculate Virgin Mary, founding and supervising the monastery of Niepokalanów near Warsaw, ***operating an amateur radio station (SP3RN)***, and founding or running several other organizations and publications. Kolbe was canonized on October 10, 1982 by Pope John Paul II, and declared a Martyr of charity. He is the ***patron saint of amateur radio operators***, drug addicts, political prisoners, families, journalists, prisoners, and the pro-life movement. John Paul II declared him "The Patron Saint of Our Difficult Century".

Gloucester County Amateur Radio Club Field Day 2020 '*Unofficial*' Results

Call Used :	W2MMD
GOTA Station :	None
ARRL/RAC Section :	SNJ
Class: :	8A
Participants :	28
Club/Group Name :	Gloucester Co ARC
Power Source (s) :	Generator, Battery, Solar
Power Multiplier :	x2

Bonus Points	
Description	Points
100% Emergency Power 8 x 100	800
Natural Power QSOs Completed	100
Public Location	100
W1AW Field Day Message	100
Satellite QSO	100
Site Visit Invited Elected Official	100
Web Submission	50
Social Media	100
Safety Officer	100
Subtotal Bonus Points Claimed	1,550

QSO Score Summary				
	CW	Phone	Digital	Total
Total QSOs	907	911	746	2,564
Total Points	1,814	911	1,492	4,217
Claimed Score	Power Mult : x2			8,434

Total Score : (QSOs Score + Bonus Points)	9,984

Band/Mode QSO Breakdown

	CW QSOs	Phone QSOs	Digital QSOs	Totals	%
160 Meters	0	0	66	66	3
80 Meters	302	303	36	641	25
40 Meters	0	501	169	670	26
20 Meters	605	67	229	901	35
15 Meters	0	16	143	159	6
10 Meters	0	0	71	71	3
6 Meters	0	11	32	43	2
2 Meters	0	12	0	12	0
SAT	0	1	0	1	0
Totals	907	911	746	2,564	100
Multiplier	x2	x1	x2		
QSO Score	1,814	911	1,492	4,217	

Field Day - June 27-28, 2020 : Starting Line-Up

Band	Operators	Mode
Satellite	Jon Pearce, WB2MNF John O'Connell, K2Q Greg Ciraula, W5DO	Phone
2 Meters	Herb Dyer, KT2Y	Phone
6 Meters	Al Arrison, KB2AYU Frank Romeo Jr, N3PUU Mike Pecorini, KD2RPE	Phone
	Al Arrison, KB2AYU Frank Romeo Jr, N3PUU Mike Pecorini, KD2RPE	Digital
10 Meters	Al Arrison, KB2AYU Frank Romeo Jr, N3PUU Mike Pecorini, KD2RPE	Digital
15 Meters	Vinnie Sallustio, N4NYY Ken Denson, WB2P Herb Dyer, KT2Y	Phone
	Jim Wright, N2GXJ Sheldon Parker, K2MEN	Digital
20 Meters	Harry Elwell, K2ATX	Phone
	Tony Starr, K3TS Tom Collins, N2SR Ed DeFonzo, W2DE John Zaruba Jr, K2ZA	CW
	Jim Wright, N2GXJ Sheldon Parker, K2MEN	Digital
40 Meters	Vinnie Sallustio, N4NYY Ken Denson, WB2P Herb Dyer, KT2Y	Phone
	Jim Wright, N2GXJ Sheldon Parker, K2MEN	Digital
80 Meters	Jim Clark, KA2OSV Lee Marino, N2LAM Fred Lederer, KD2WPD	Phone
	Tony Starr, K3TS Tom Collins, N2SR Ed DeFonzo, W2DE John Zaruba Jr, K2ZA	CW
	Eric Morris, N2BRJ	Digital
160 Meters	Eric Morris, N2BRJ	Digital

Field Day - June 27-28, 2020

Support Staff and Bonus Point Information

Public Location	**Gloucester County 4-H Fairgrounds**	**100 Bonus Points**
Safety Officer Checklist	**Herb Dyer, KT2Y**	**100 Bonus Points**
Public Information Table	**CLOSED TO THE PUBLIC**	**100 Bonus Points**
Culinary Staff	**Jeff Garth, WB2ZBN Herb Dyer, KT2Y**	***Priceless !!!***
Collect/Submit Electronic Logs	**Jim Wright, N2GXJ**	**50 Bonus Points**
Off-Grid Power	**Al Arrison, KB2AYU Magical Electric Truck**	**100 Bonus Points /Transmitter**
Main Backup Generator	**None**	**100 Bonus Points /Transmitter**
Alternative Power	**Herb Dyer, KT2Y**	**100 Bonus Points**
Educational Activity	**None**	**100 Bonus Points**
Field Day Youth Participation	**None**	**20 Points Bonus 100 Bonus Max**
Media Publicity	**None**	**100 Bonus Points**
Social Media	**John Zaruba Jr, K2ZA**	**100 Bonus Points**
Message Origination To Section Manager	**None**	**100 Bonus Points**
Copy W1AW Field Day Message	**Yes**	**100 Bonus Points**
NTS/ICS-213 Message Handling	**None**	**10 Points/Message 100 Bonus Max**
Site Visit - Invited Elected Official	**Yes**	**100 Bonus Points**
Site Visit - Invited Served Agency Official	**None**	**100 Bonus Points**
Satellite QSO	**GCARC SkunkWorks Team**	**100 Bonus Points**

A BIG GCARC Thank You to all the participants of the 2020 Field Day

The Scores - Are In! Nicely Done GCARC!

By Jim Wright, N2GXJ

Can you remember January, and snowstorms? Maybe not the snowstorms so much, but how about the ARRL's January VHF and up contest? As you may recall from the February 2020 CrossTalk, your Club, some of your fellow Club members banded together as a team to enter a limited multi-operator club score for the Gloucester Co ARC during the ARRL's January VHF and up contest. Some members operated together as a multi-op station from the Clubhouse, while others contributed their individual scores from their home stations in our local area for a combined team score. How good did we do compared with other clubs in this category? At the time, we did not know. The key was that we all had fun. But there were suspicions that we might have done quite well.

Now we know just how well. The scores, are published! Have you seen them in the new issue of QST? If not, take a look. Look for the limited multi-operator results. They're also available online **(https://contests.arrl.org/scores.php)**. Top 5 in the nation??!!! Yes, you are reading that right! It really was an amazing team effort! Thank you again for the fun times in this contest!

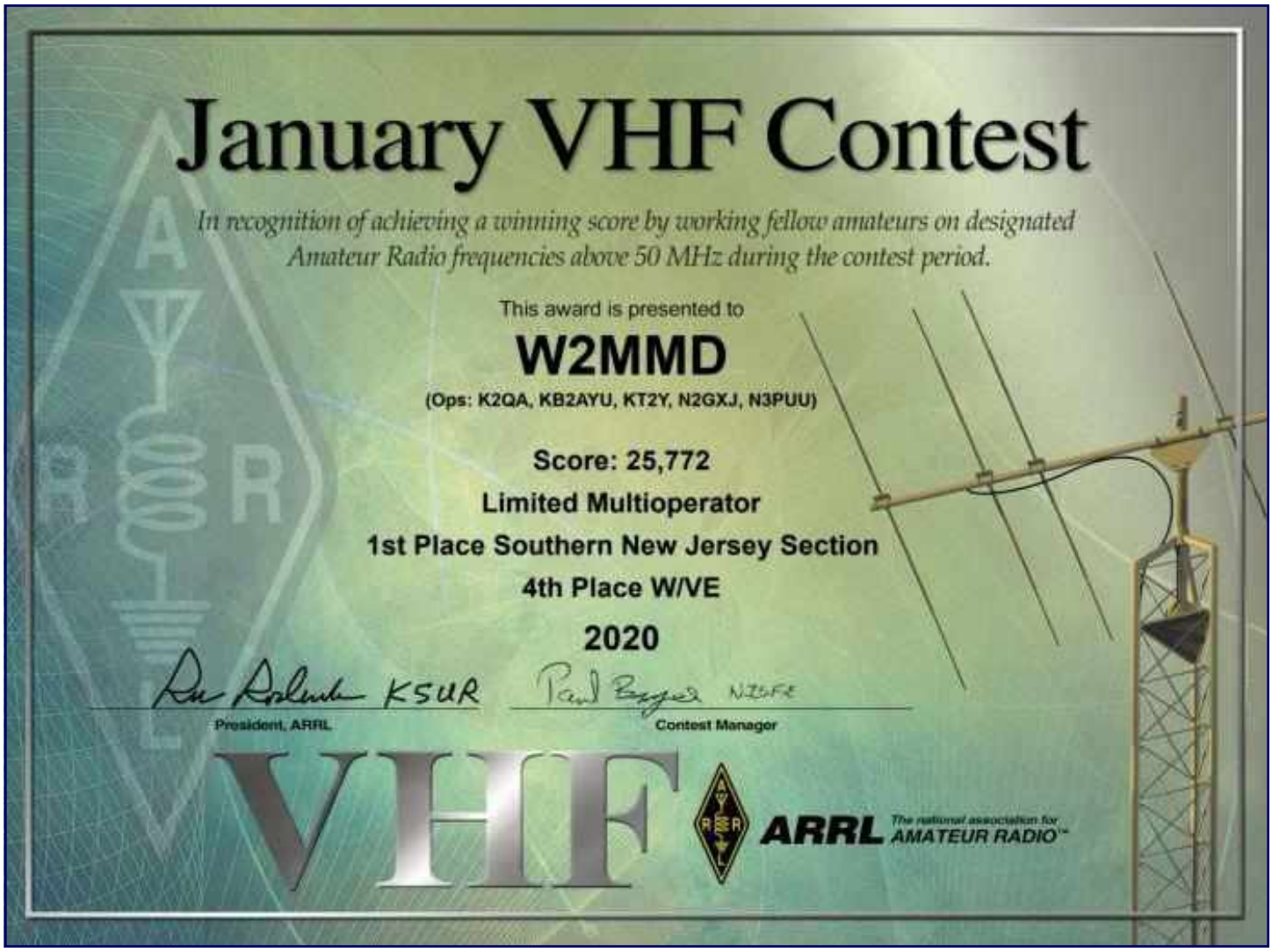

WSJT-X Tone Distortion Issue

By John Hill, W2HUV

The **AC7AV** video **http://youtu.be/lO5Da4fyt2k** includes recordings of distortion generated by the RemoteHams.com audio compression methods as well as a work around. The work around is to mix a tiny amount of white noise with the WSJT-X audio output. Al Arrison (KB2AYU) and I have verified that this issue applies to the Remote HF Station and the Remote VHF Station (when it becomes available).

It is amazing that I have been making FT8/FT4 QSOs using the Remote HF Station since January of 2019 and never knew that there was an issue! As they say, "Ignorance is bliss".

I have already tested the **free Windows White Noise app (https://www.microsoft.com/en-us/p/white-noise/9wzdncrdfs44?activetab=pivot:overviewtab)** available at the Microsoft Store with the CABLE Input (Audio Virtual Cable) output device and it does works.

An interesting observation is that there no longer is any ALC action. The ALC stays at zero. It is now apparent that the ALC increases as the noise builds up without the white noise and that most of the power output goes into the noise. The power level no longer exceeds about 45 to 50 watts.

I have completed rewriting the WSJT-X Operation.PDF help topic to incorporate the use of the free Windows White Noise app. Jeff has uploaded it to the website on the Remote HF Station page.

The Frankford Radio Club Scholarship will join the growing list of scholarships administered by the ARRL Foundation.

The Frankford Radio Club **(FRC - https://www.gofrc.org)** is a very active contesting club centered in Alburtis, Pennsylvania, dedicated to increasing operating skill and technical expertise through radiosport. The club's motto is "Proficiency Through Competition." The scholarship will be $1,500, with the first scholarship expected to be awarded in 2020. Applicants must be a US citizen and hold a valid FCC-issued amateur radio license. The scholarship is open to graduating high school seniors, undergraduates, and US military veterans. Applicants must be pursuing a degree in electronics, electrical engineering, computer science, or related fields at any accredited college, university, or trade school that has established programs in the field of study. Preference will be given to applicants residing within 175 miles of Alburtis, Pennsylvania. The ARRL Foundation will determine award recipients after evaluating all applications and disburse the award funds directly to the chosen institution of higher learning.

Article Credit : The ARRL Letter for June 4, 2020 - www.arrl.org

Satellite Antenna Upgrade At The W2MMD Clubhouse

By Jon Pearce, WB2MNF

The Clubhouse satellite station has had steady incremental upgrades over the past few years but one factor had remained constant - the antenna and rotator system. The antennas were 1980's style Cushcraft units that were probably average at the time and gave reasonable but not outstanding performance. Since "outstanding" is a goal of the Skunkworks team we were able to procure through a Club member donation a pair of M2 state-of-the-art satellite antennas - the 42-element 436CP42UG crossed Yagi for 70 cm and the 22 element 2MCP22 crossed Yagi for 2 meters along with the fiberglass boom to connect them. These are the top of the line satellite antennas from M2 and promised to significantly improve Clubhouse satellite operations.

Both antennas are 18 feet long and have considerable gain and would be a significant improvement over the existing antennas but the additional length created potential problems in clearing the Clubhouse roof and the guy wires for the 6 meter beam so some initial planning was necessary before the antennas arrived. Al KB2AYU did some initial measurements from the roof of the Clubhouse and concluded that the mast for the antennas needed to be lengthened to provide enough clearance so he obtained a length of pipe of the correct length. He and Frank N3PUU were able to remove the old antennas and rotator from the mast and string new hardline and rotator cables to the tower before the new antennas were completed.

The new antennas required significant assembly - 42 elements is a LOT of building, especially when a millimeter of error can blow the efficiency of the antennas. Al painstakingly assembled each section of both antennas, carefully measuring each element to be sure that it was inserted correctly. In most Yagi antennas the director elements decrease in length along the boom, but in these antennas a director might be longer than the previous element so each element needed to be carefully measured down to 1/16 inch. And two elements weren't cut to the specified length so Al had to build them from other materials. To make it even more difficult the assembled antennas were 18 feet long in three 6-foot sections so they couldn't be completely assembled in the Clubhouse - they had to be finished off outside along with the vertical elements of the 2 meter antenna that wouldn't fit out the Clubhouse door if assembled. Frank and Al assembled the sections outside using aluminum grease.

Finally the antennas were assembled and sitting on sawhorses outside of the shed. At that point Frank and Al noticed that the pre-drilled holes for the mounting plate provided by M2 would align that plate in line with the antenna elements, destroying their directivity. That problem was even noted in the assembly directions, which advised that the assembler could drill his own holes if he didn't like it. The problem, of course, was that drilling a perfectly-centered hole through a pipe resting on sawhorses is pretty difficult so Frank designed and 3D-printed a drilling jig that would fit over the mast, lock into the existing holes and provide guide holes for a perfectly-aligned 45 degree mounting plate. There seems to be no problem that Frank can't solve with his back-yard machine shop.

Once that was done it was time to mount them, but there's no way that antennas of that size could be mounted without a bucket truck. Fortunately new GCARC member Dave KB3VEQ had shown up at Field Day with his own bucket truck and was willing to bring it out for this project. (Any ham who owns a bucket truck should never have to buy beer again…) Dave mounted the rotator, ran the boom thru the elevation rotator and then fastened each antenna to the end of the boom. He then connected the cables to the rotator and antennas - and we thought we were ready to go. Not so fast…

Satellite Antenna Upgrade - Continued on page 22

Satellite Antenna Upgrade - Continued from page 21

The test needed one guy in the Clubhouse (me) with an HT to rotate the antennas on command of the guys who were outside. After searching thru all of our Clubhouse gear we were able to scrounge up a couple of HTs (what kind of hams don't all have HTs hanging from their belts???) and we were ready for the test. I was given the command to raise the elevation of the antennas, which was followed almost immediately by the command "STOP!". Walking outside and looking up I saw the antenna array pointing 10 degrees - towards the ground! We had carefully executed each step - except for figuring out which side of the boom the antennas should face. Obviously the boom rotates horizontally in the elevation rotator with one side rising and the other side falling, and we had the antennas facing to the falling side. Amidst laughter, groans and trying to figure out geometry with our fingers we instructed Dave to remove the antennas and replace them at different ends of the boom. And our frustration was compounded when that arrangement ALSO aimed the antennas into the ground. That prompted another round of drawing geometric shapes in the air with KB2AYU, K2QA, N3PUU and WB2MNF all thinking that they had finally figured out the right way to orient the antennas so that they would point up instead of down. The third time was the charm, with the antenna finally rising in accordance with the rotator controller. The new cable arrangement required longer coax connections between the antennas and the hardline so Al made them overnight and installed them a day later. At that point things looked really good and I was able to make a few contacts on subsequent satellite passes.

In the following couple of days I did some testing from home using the new antennas (connecting thru the VPN to the rotator and SDR servers) and found that the 70 cm antenna was much improved but the 2 meter antenna wasn't performing well. So I went out to the Clubhouse and found that the 2 meter antenna has slipped on the boom and was now facing at about 45 degrees above the desired elevation. Aligning the antennas with the Clubhouse roof and climbing up onto the roof I was able to push it back into alignment but it didn't stay - the weight of the feedline dragged down the back of the antenna. Frank and Al were able to tighten the boom bolts a couple of days later and it now stays in alignment.

And it seems to be working really well! On Thursday evening I was able to make 7 satellite contacts in a couple of hours during which there were several satellite passes. Signals from our station and other stations were strong in the downlink, indicating that the both antennas are working well.

There are still some final necessary adjustments but the station is now fully operational. So if you want to work some satellites email me (wb2mnf at arrl dot net) and we'll find a time to get together when some satellites will be overhead.

Satellite Antenna Upgrade - Continued on page 23

Satellite Antenna Upgrade - Continued from page 22

Original Antennas

New Antennas

Satellite Antenna Upgrade - Continued on page 24

Satellite Antenna Upgrade - Continued from page 23

Frank & Al removing old antennas

Dave mounts the rotator

KN6EQU Balloon Wins Cross-Country Educational Challenge Race

Amateur Radio on the International Space Station **(ARISS - https://www.ariss.org)** partner ISS-Above inventor Liam Kennedy, KN6EQU, of Pasadena, California, has been declared the winner of a mid-altitude cross-continent educational challenge balloon race. His balloon was one of four launched on June 1 from the west coast with the goal of being the first to reach the Eastern Time Zone.

Coming in second was the balloon of Ted Tagami, KK6UUQ, from ARISS partner Magnitude.io.

Joanne Michael, KM6BWB

It all began when educator Joanne Michael, KM6BWB - a science coach at the Wiseburn Unified School District in Los Angeles - challenged another ARISS partner group to a mid-altitude, cross-continent balloon race. Michael has led her students in several balloon launch attempts from the Los Angeles area. Given the disruption caused to schools by the COVID-19 pandemic, Michael wanted to shake things up a bit and give students worldwide a unique distance-learning treat that could safely be accomplished during the pandemic. She challenged Tagami, and he accepted. On May 31, a fourth team joined in the competition: Steve Potter, K7HAK, and Trevor Macduff of Washington.

Tagami launched his balloon from Oakland, California. Kennedy got wind of the idea and also came on board, launching from Pasadena, California. Michael set her balloon aloft in Los Angeles, while Potter and Macduff's balloon lifted off from southern Washington.

ARISS, Magnitude.io, and ISS-Above are ISS National Lab Space Station Explorer (SSE) partners that work to inspire, engage, and educate students in science, technology, engineering, arts, and mathematics (STEAM) topics and to pursue careers in those fields.

The story caught fire on social media, inspiring one teacher to figure out how to initiate a launch from her school. "Let's get planning and get your thoughts and ideas, and let's make this happen for the students," she said in a post.

Students can still track each balloon's location, altitude, and temperature, which are fed automatically via the Automatic Packet Reporting System **(APRS - https://aprs.fi).** The call signs are KM6BWB-9, KK6UUQ-8, KN6EQU-2, and K7HAK-11.

KN6EQU Balloon - Continued on page 26

KN6EQU Balloon - Continued from page 25

ARISS said the race initiative gave students the opportunity to tally and track the states each balloon traveled through and plot altitude versus temperature (and other parameters). Also, by researching weather patterns, students could make assumptions from their own data. This could include speed variations due to weather. They could also predict each balloon's flight path and when each might cross the finish line.

For more information on the balloon launch, lesson plans, and the live stream video link, visit the **ARISS Mid-Altitude Balloon Race (https://www.ariss.org/mid-altitude-balloon-race.html)** page.

Article Credit : The ARRL Letter for June 4, 2020 - www.arrl.org

ARRL To Hold 2021 National Convention At Orlando HamCation®

ARRL has announced that Orlando HamCation® **(https://www.hamcation.com)** will host the 2021 ARRL National Convention **(http://www.arrl.org/arrl-expo)** in Orlando, Florida, February 11 - 14. The convention will mark the 75th anniversary of HamCation - one of the largest annual ham radio gatherings. The convention theme, "reDiscover Radio," is a rallying call for radio amateurs committed to developing knowledge and skills in radio technology and radio communication.

The convention will kick off on Thursday, February 11, with a series of day-long ARRL Training Tracks and a National Convention luncheon at the DoubleTree by Hilton Hotel Orlando at SeaWorld. A complete program and list of presenters will be available later this summer. Registration will open in the fall. HamCation will host the rest of the convention Friday - Sunday, February 12 - 14, at the Central Florida Fairgrounds & Expo Park in Orlando.

HamCation is sponsored by the Orlando Amateur Radio Club (OARC), an ARRL-affiliated club. OARC is supported by volunteers from radio clubs throughout the region. This year, an estimated 24,200 people attended all 3 days of the event.

Details **(https://www.hamcation.com)** on tickets and information about forums, exhibits (including information for vendors and tailgaters), testing, travel, and preferred hotels with special rates are on the HamCation website.

Online ticket sales begin in August. Tickets purchased (postmarked) by December 1, 2020, will cost $15 and are valid for all 3 days.

Article Credit : The ARRL Letter for June 25, 2020 - www.arrl.org

Rescued Radio Amateur Says, "Ham Radio Saved My Life"

Alden Sumner Jones IV, KC1JWR, of Bennington, Vermont, is thankful for amateur radio, after he suffered a medical incident and lost consciousness on June 15 while hiking with others along a remote section of the Long Trail, not far from his home. An EMT from Appalachian Mountain Rescue (AMR), who was hiking nearby, saw Jones pass out, but was unable to connect with 911 via his cell phone. Jones, 41, regained consciousness and was successful in contacting Ron Wonderlick, AG1W, via the Northern Berkshire Amateur Radio Club's K1FFK repeater on Mount Greylock. Wonderlick initiated what turned into an 8-hour effort to get Jones off the trail and to a medical facility, acting as a relay among Jones, emergency crews, and other agencies involved.

As the **Bennington Banner (https://www.benningtonbanner.com/stories/stricken-hiker-airlifted-from-long-trail,607234)** reported, "The Vermont State Police also received assistance from several licensed amateur radio operators who helped facilitate communications, greatly assisting in the rescue."

A helicopter-supported litter carries Alden Sumner Jones IV, KC1JWR, to safety. [Vermont State Police photo via the Bennington Banner]

Matthew Sacco, KC1JPU, headed to a staging area where rescue crews were gathering. When he could not make it into the repeater, he employed some ham radio ingenuity to fashion a J-pole antenna from some window line he had on hand, casting it into a tree using a fishing pole. That did the trick. An individual on site was able to obtain an accurate location for Jones using the GPS on his cell phone.

After it was determined that rescuers could not reach Jones using an all-terrain vehicle, arrangements were made to have a search-and-rescue crew from New York retrieve Jones by helicopter. Amateur radio participants were able to relay critical information, including an accurate location, as preparations continued.

Jones, meanwhile, took advantage of his time with the EMT and other rescuers to talk up amateur radio and explain how to get licensed. According to one account, rescuers were having trouble making contact with the helicopter, so Jones loaned them a better antenna he happened to have.

Jones was eventually flown to a hospital in Albany, New York, again taking advantage of the occasion to promote amateur radio to the helicopter pilot and crew. Jones is said to be recovering.

"Ham radio saved my life last night, and I am very thankful for how everyone helped me," Jones said afterward.

Article Credit : The ARRL Letter for June 25, 2020 - www.arrl.org

Newer Solar Cycle 25 Forecast Runs Counter To Consensus

Scientists associated with the National Center for Atmospheric Research, the University of Maryland, NASA Goddard Space Flight Center, and other institutions are offering a "bold prediction" on how Solar Cycle 25 will play out. In a paper, **"Overlapping Magnetic Activity Cycles and the Sunspot Number : Forecasting Sunspot Cycle 25 Amplitude," (https://arxiv.org/pdf/2006.15263.pdf)** they assert that the next sunspot cycle will be of major proportions. The forecast stands in stark contrast to the consensus of forecasters who predict that the magnitude of the nascent Cycle 25 may not be much different from the current unremarkable solar cycle, which appears to have reach its low point.

"From the dawn of modern observational astronomy, sunspots have presented a challenge to understanding -- their quasi-periodic variation in number, first noted 160 years ago, stimulates community-wide interest to this day," the abstract points out. "A large number of techniques are able to explain the temporal landmarks, (geometric) shape, and amplitude of sunspot 'cycles,' however, forecasting these features accurately in advance remains elusive."

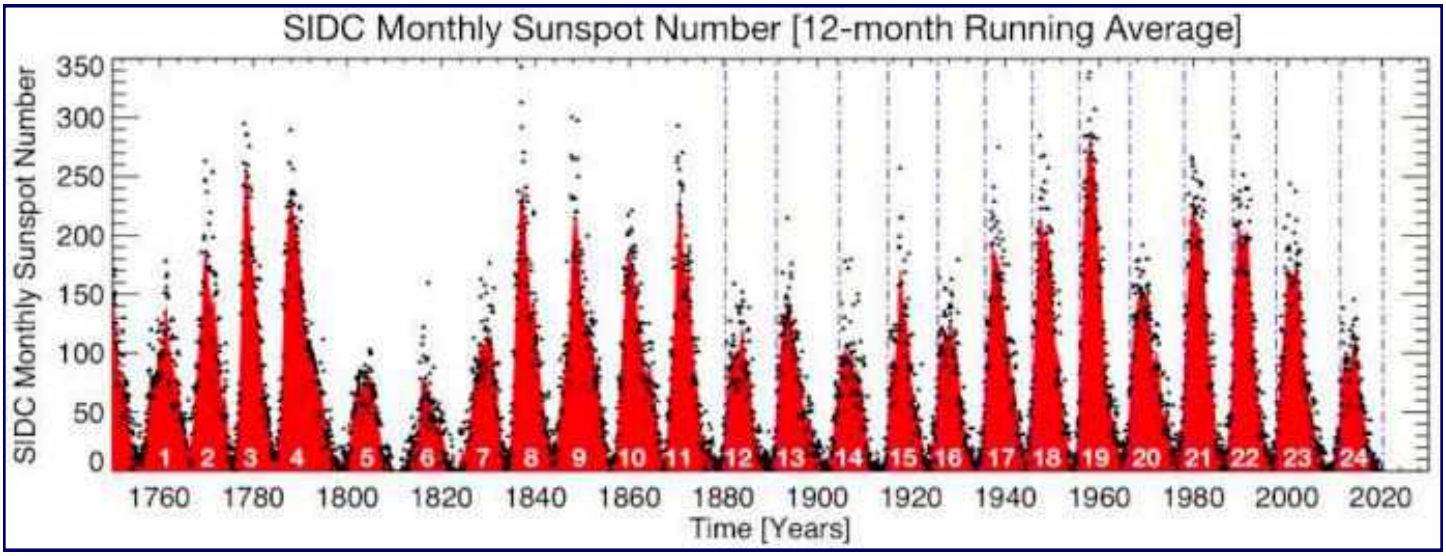

Monthly sunspot numbers since 1749. The data values are represented by dots, and the 12-month running average values are illustrated as a red shaded area. Vertical blue dashed lines signify the magnetic activity cycle termination times that trigger the rapid growth of sunspot activity.

The paper notes that recent studies have illustrated a relationship between the sun's 22-year Hale magnetic cycle and the production of sunspot cycle landmarks and patterns, but not the amplitude of the cycle.

"Using discrete Hilbert transforms on 270 years of monthly sunspot numbers to robustly identify the so-called 'termination' events -- landmarks marking the start and end of sunspot and magnetic activity cycles -- we extract a relationship between the temporal spacing of terminators and the magnitude of sunspot cycles," the abstract explains. "Given this relationship and our prediction of a terminator event in 2020, we deduce that Sunspot Cycle 25 will have a magnitude that rivals the top few since records began. This outcome would be in stark contrast to the community consensus estimate of Sunspot Cycle 25 magnitude."

Newer Solar Cycle 25 Forecast - Continued on page 29

Newer Solar Cycle 25 Forecast - Continued from page 28

NASA's Solar Dynamic Observatory captured this image of a sunspot, with a core larger than Earth.

According to the paper, low-amplitude solar cycles appear to correspond with widely separated terminators, while larger-amplitude cycles correspond to more narrowly separated terminators.

"[O]ur best estimate for the [sunspot number] amplitude of Solar Cycle 25 is 233 spots, with a 68% confidence that the amplitude will fall between 204 and 254 spots," the paper posits. "We predict with 95% confidence that the Cycle 25 amplitude will fall between 153 and 305 spots."

The researchers concede that their forecast is outside of the scientific consensus, based on different paradigms. "Over the coming months, as [Solar Cycle] 25 matures, it will become evident which of these paradigms is most relevant," the paper says. "Very early indications of the spot pattern are appearing at higher-than-average latitudes (~40°). Historically, high-latitude spot emergence has been associated with the development of large amplitude sunspot cycles - only time will tell."

Article Credit : The ARRL Letter for July 9, 2020 - www.arrl.org

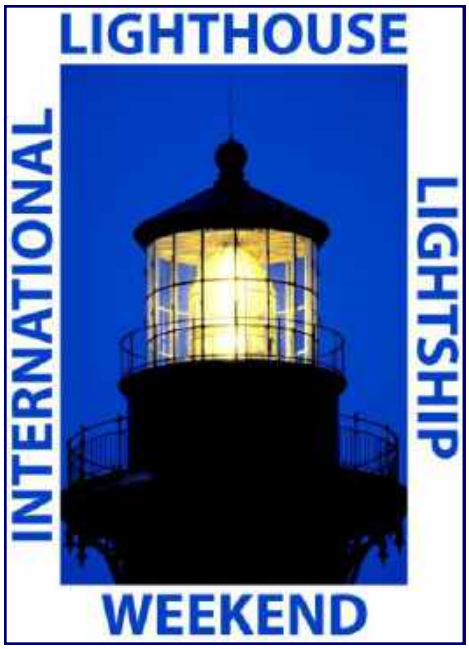

August 22-23, 2020

Washington Club Conducts Outdoor Amateur Exam Session

Parking lots may be replacing community centers, schools, and clubhouses as convenient locations to conduct amateur radio examination sessions. On June 20, the **Mike and Key Amateur Radio Club (https://www.mikeandkey.org)** in Washington took over a Boeing parking lot to administer tests under the ARRL Volunteer Examination Coordinator (ARRL VEC). Volunteer Examiner Scott Robinson, AG7T, said his team had been unable to administer exam sessions since early March.

"Based upon King County and Washington State COVID guidance, we thought we could give an outdoor session using one of Boeing's parking lots in Renton," Robinson told ARRL. "That required a lot of work to organize."

Volunteer examiners at the June 20 session included K7PIA, AG7T, KL7WM, KD7IQL, KF7RWA, W7GIL, and K7CMW. [K7CMW, photo]

Robinson said the team developed a COVID-19 mitigation plan that detailed how the examiners would address several major areas. These included health screening of VEs and exam candidates, social distancing in all aspects of the session, sanitation in setting up the test area and in session processes, and contact tracing.

"With those details agreed to, an information document was produced for the examinees that listed a set of requirements each of them needed to meet," Robinson said. "For example, no carpooling to the session. Each examinee who agreed to the requirements was then registered for the session." Candidates had to register in advance via email, at which time they would receive directions to the exam session location and requirements.

A custom set of test booklets were produced for single use and then disposed of. "We used plastic sheet protectors to ensure minimal handling of examinees' documents by the VEs," Robinson explained. "These were also thrown away." Examinees parked in every other parking spot, facing the VE area in the center of the lot. This allowed the VEs to supervise those taking exams by looking through car windows.

"We had 24 examinees at the session and gave 29 exams, leading to 14 Technicians, seven Generals, and two Amateur Extras," Robinson said, noting that an additional 10 candidates are on the waiting list. "We are going to do this again on the third Saturday in July."

Article Credit : The ARRL Letter for July 9, 2020 - www.arrl.org

2020 Field Day Highlights

ARRL Field Day
June 27, 2020

Call : AB2E
Operator (s) : AB2E
Station : AB2E

Class : 1D HP
QTH : SNJ
Operating Time (hrs) : 9.5

Summary :

Band	CW Qs	Ph Qs	Dig Qs
160 :	10	0	0
80 :	419	0	0
40 :	107	0	0
20 :	318	0	0
15 :	12	0	0
10 :	4	0	0
Total :	870	0	0

Total Score : 1,740

Club : Frankford Radio Club **01**

Comments :
Rig : FTDX-9000D/Acom 2000A
Antennas : All Wires
160m Inverted L @ 95ft
80m Dipole @ 90ft
40m Delta loop @ 65ft
20m Delta loop @ 60ft
15m/10m Homebrew Fan Dipole @ 55ft

IARU HF World Championship
July 11, 2020

Call : WK2G
Operator (s) : WK2G
Station : WK2G

Class : SOAB CW HP
QTH : SNJ
Operating Time (hrs) : 17
Location : USA

Summary :

Band	CW Qs	Ph Qs	Zones	HQ Mults
40 :	360	0	19	29
20 :	570	0	23	24
15 :	140	0	9	4
10 :	2	0	1	1
Total :	1,072	0	52	58

Total Score : 420,640

Club : Frankford Radio Club **04**

Comments :

Wow, that was fun!
As usual, things did not go as planned! At 1:45 local time just 15 minutes before the start, I was informed by my XYL that we had to finish a new bathroom and paint the first floor of a house we are renovating since the new tenants wanted to move in a week sooner. Off we went, and a grueling 8 hours later we made it back home. Totally exhausted but managed to get on for 4 hours before having to stop to sleep. Around 1130Z I got up and was able to put in a very productive final 5.5 hours (9.5 hours total).

So much for hoping to operate for 24hours.

Nice to make a few Qs on all 6 HF bands, but 80m was the money band, and 20m a close 2nd. I was hoping to break 1000 Qs but didn't quite make it. Pleased that I came close averaging 100 Qs/hour for the duration and had a peak rate of 240/hour.

ARRL Field Day (June) - 2020-06-27 1800Z to 2020-06-28 2100Z - 875 QSOs AB2E Max Rates :
2020-06-28 0341Z - 4.0 per minute (1 minute(s)), 240 per hour by
2020-06-28 0349Z - 2.7 per minute (10 minute(s)), 162 per hour by
2020-06-28 1715Z - 2.3 per minute (60 minute(s)), 136 per hour by

This score is going to my local club, Gloucester Co ARC.

Hope to see all of you in IARU in a couple weeks.

73 Darrell AB2E

IARU HF World Championship
July 11, 2020

Call : AB2E
Operator (s) : AB2E
Station : AB2E

Class : SOAB (A) CW HP
QTH : SNJ
Operating Time (hrs) : 2
Location : USA

Summary :

Band	CW Qs	Ph Qs	Zones	HQ Mults
40 :	21	0	7	5
20 :	214	0	20	29
Total :	235	0	27	34

Total Score : 41,485

Club : Frankford Radio Club **02**

Comments :
Rig : FTDX-9000D/Acom 2000A
Antennas : All Wires
40m Delta loop @ 65ft
20m Delta loop @ 65ft

Hi all,
Only was able to get in a couple hours, but got a couple great runs going on 20m. Decent HQ mult total on 20 for limited time.

Nice to work several Asiatic Russia stations who called in for mults.

See you in NAQP CW in August.

73 Darrell AB2E

IARU HF World Championship
July 11, 2020

Call : K3TS
Operator (s) : K3TS
Station : K3TS

Class : SOAB (A) Mixed HP
QTH : SNJ
Operating Time (hrs) : 2
Location : USA

Summary :

Band	CW Qs	Ph Qs	Zones	HQ Mults
40 :	21	0	7	5
20 :	214	0	20	29
Total :	235	0	27	34

Total Score : 41,485

Club : Frankford Radio Club **03**

Comments :
Decided to work mixed mode, but most activity was on CW. Propagation to EU was poor both mornings, but good in the evening. Good openings to Asia were a nice surprise, and I even worked a new country or two. Had a couple of decent runs, but the majority of contacts came from S&P. Glad to find that my new call sign was easily copied on both phone and CW. Thanks to all for the contacts. 73.

Tony K3TS

Kenwood TS-590sg
Acom 1000 1kw amp
Force 12 C19xr at 48 feet
80/40 dipoles at 42 feet
GoFRC!

IARU HF World Championship
July 11, 2020

Call : K2SE
Operator (s) : K2SE
Station : K2SE

Class : SOAB CW LP
QTH : SNJ
Operating Time (hrs) : 8.75
Location : USA

Summary :

Band	CW Qs	Ph Qs	Zones	HQ Mults
80 :	23	0	4	4
40 :	202	0	16	27
20 :	114	0	16	17
15 :	15	0	6	4
10 :	3	0	1	2
Total :	357	0	43	54

Total Score : 112,617

Club : Frankford Radio Club **05**

Comments : *This was my first entry in this contest. I enjoyed it and hope to do it again next year.*

2020 Field Day Highlights

Al KB2AYU and his home-made crank-up tower trailer

There are more pictures plus videos on the 2020 Field Day page on the website

2019-2023 Element 3 General Class License Question Quiz

This month we finish up with **Subelement G3 : Radio Wave Propagation** and start **Subelement G4 : Amateur Radio Practices** (Answers on 'Last Page Calendar')

G3C08
Why are HF scatter signals in the skip zone usually weak?
A. Only a small part of the signal energy is scattered into the skip zone
B. Signals are scattered from the magnetosphere, which is not a good reflector
C. Propagation is through ground waves, which absorb most of the signal energy
D. Propagation is through ducts in the F region, which absorb most of the energy

G3C09
What type of propagation allows signals to be heard in the transmitting station's skip zone?
A. Faraday rotation
B. Scatter
C. Chordal hop
D. Short-path

G3C10
What is Near Vertical Incidence Skywave (NVIS) propagation?
A. Propagation near the MUF
B. Short distance MF or HF propagation using high elevation angles
C. Long path HF propagation at sunrise and sunset
D. Double hop propagation near the LUF

G3C11
Which ionospheric layer is the most absorbent of long skip signals during daylight hours on frequencies below 10 MHz?
A. The F2 layer
B. The F1 layer
C. The E layer
D. The D layer

G4A01
What is the purpose of the "notch filter" found on many HF transceivers?
A. To restrict the transmitter voice bandwidth
B. To reduce interference from carriers in the receiver passband
C. To eliminate receiver interference from impulse noise sources
D. To enhance the reception of a specific frequency on a crowded band

G4A02
What is one advantage of selecting the opposite, or "reverse," sideband when receiving CW signals on a typical HF transceiver?
A. Interference from impulse noise will be eliminated
B. More stations can be accommodated within a given signal passband
C. It may be possible to reduce or eliminate interference from other signals
D. Accidental out-of-band operation can be prevented

General Class Quiz - Continued on page 36

G4A03
What is normally meant by operating a transceiver in "split" mode?
A. The radio is operating at half power
B. The transceiver is operating from an external power source
C. The transceiver is set to different transmit and receive frequencies
D. The transmitter is emitting an SSB signal, as opposed to DSB operation

G4A04
What reading on the plate current meter of a vacuum tube RF power amplifier indicates correct adjustment of the plate tuning control?
A. A pronounced peak
B. A pronounced dip
C. No change will be observed
D. A slow, rhythmic oscillation

G4A05
What is a reason to use Automatic Level Control (ALC) with an RF power amplifier?
A. To balance the transmitter audio frequency response
B. To reduce harmonic radiation
C. To reduce distortion due to excessive drive
D. To increase overall efficiency

G4A06
What type of device is often used to match transmitter output impedance to an impedance not equal to 50 ohms?
A. Balanced modulator
B. SWR bridge
C. Antenna coupler or antenna tuner
D. Q multiplier

G4A07
What condition can lead to permanent damage to a solid-state RF power amplifier?
A. Insufficient drive power
B. Low input SWR
C. Shorting the input signal to ground
D. Excessive drive power

G4A08
What is the correct adjustment for the load or coupling control of a vacuum tube RF power amplifier?
A. Minimum SWR on the antenna
B. Minimum plate current without exceeding maximum allowable grid current
C. Highest plate voltage while minimizing grid current
D. Maximum power output without exceeding maximum allowable plate current

ARRL SNJ Section Convention and Hamfest

Presented By The

Gloucester County Amateur Radio Club

W2MMD

Celebrating Our 61st Year

www.w2mmd.org

Open to the public at 8 AM

42nd Annual Hamfest - September 13, 2020

ADMISSION : $10.00

Non-Ham spouses and kids FREE

Masks or Face-Coverings Will Be Required Prior To Purchasing Your Ticket

Gates open at 6:00 am for vendors and tailgaters

Tailgating rules (open grassy areas only) :

- **$8.00** per vehicle space, up to 10 feet
- No reserving or holding spaces for tailgaters not yet present
- First come, first serve

Table rules (covered pavilions only) :

- **$12.00** per table (yours), or table space up to 8 feet
- Tailgating under pavilions will fall under "Table Rules" rates.

Some pavilion spaces have electric. Space price does not include admission.

Programs and Forums starting at 9:00 am

ARRL VEC License Testing starting at 9:00 am

- **Exam Testing @ W2MMD Clubhouse**
- **Exam Fee : $15.00**

DXCC-VUCC-WAS Card Checking at 11:30 am
GRAND PRIZE : $200 Cash
Door prize drawings throughout the day

Vendors and Tailgaters of new and used radio and electronic equipment

Special Event Station : W2MMD

- We will be on-the-air from 8:00 am to 2:00 pm
  - **40 Meters**
  - **20 Meters**
- QSL cards will be mailed out after the event

Food and beverages

To be decided at a later date

Gloucester County 4-H Fairgrounds • www.w2mmd.org
235 Bridgeton Pike (Route 77) • Mullica Hill, NJ 08062
GPS : 39.715572°, -75.211944°

Contact : Sheldon Parker, K2MEN at sheldonparker@comcast.net
GCARC, PO Box 370, Pitman, NJ 08071

Ver: 2020:0707

Gloucester County Amateur Radio Club
General Membership *ZOOM* Meeting Minutes
Wednesday, July 1, 2020

Meeting opened @ 1934 Hours via Zoom online.

Previous meeting minutes moved, seconded, and approved as printed in CrossTalk by voice vote of members present.

Attendance : 27 members
Visitors : None

Treasurer's report :

- YTD Income : $2,121
- YTD Expenses : $2,315
- Net : $(193)

Treasurer's report approved by voice vote of members present.

Committees :

Clubhouse : Al KB2AYU reported **Chris KD2SBR** and **Greg KC3NDJ** brought out a machine to fill in the cable trenches. Many thanks for the help!

Hamfest : Sheldon K2MEN reported preparations on schedule.

Contests : Tony K3TS reported IARU Contest 7/11/20, North American QSO Party RTTY 7/18/20

Field Day : Jim KA2OSV reported one of the best Field Days in years despite COVID-19. **Jim N2GXJ** reported the following scores :

- Class 8A
- 100 QSOs/Hr average rate
- 2,564 total QSOs
- QSOs by mode :
    - 911 SSB
    - 907 CW
    - 746 Digital
- QSOs by band :
    - 12 2m
    - 43 6m
    - 71 10m
    - 159 15m
    - 901 20m
    - 670 40m
    - 641 80m
    - 66 160m

July 2020 General Membership Meeting Minutes - Continued on page 39

July 2020 General Membership Meeting Minutes - Continued from page 38

- Total points 9,984

Old Business : John W2HUV inquired about the status of the Clubhouse grounding system improvements for this year. Project on hold due to budget effects resulting from COVID-19 pandemic.

New Business : None

Meeting adjourned @ 1959 Hours.

Respectfully submitted,
John Zaruba Jr, K2ZA
Recording Secretary

When Are Solar Conditions Going To Pick Up Again For HF Radio Communications?

By Jim Wright, N2GXJ

Here is an interesting link from NOAA that provides an interactive chart of the current solar cycle : **https://www.swpc.noaa.gov/products/solar-cycle-progression**

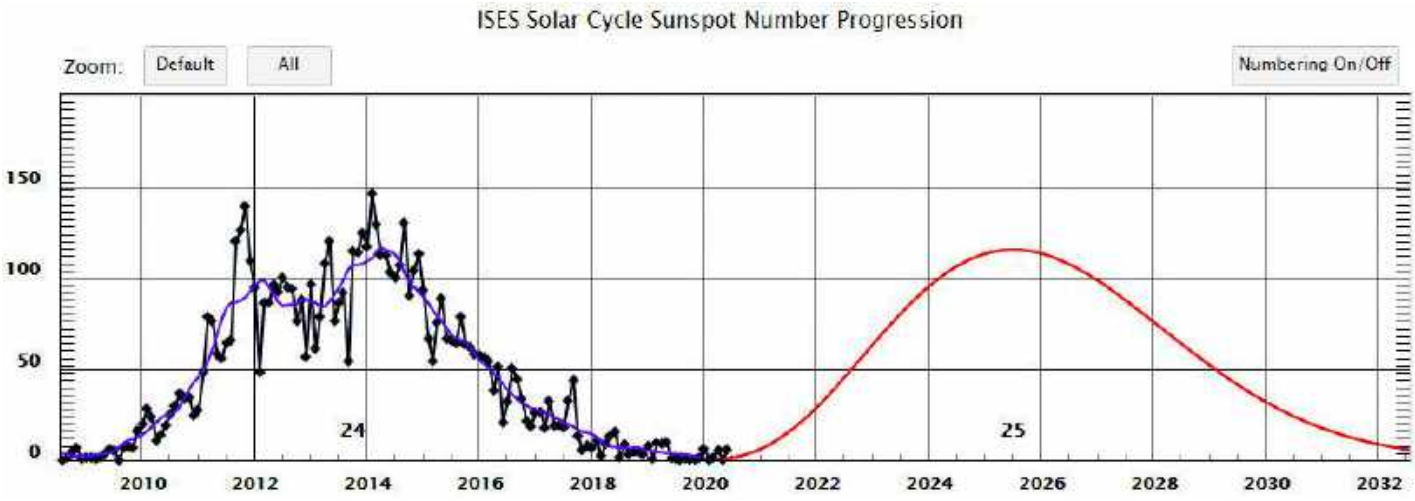

As described on the "details" tab :

*"The forecast comes from the Solar Cycle Prediction Panel representing NOAA, NASA and the International Space Environmental Services (ISES). This amounts to the 'official' forecast for the solar cycle. The Prediction Panel forecasts the sunspot number expected for solar maximum and has predicted **Cycle 25** to reach a **maximum of 115** occurring **in July 2025**. The error bars on this prediction mean the panel expects the cycle maximum could be between 105-125 with the peak occurring between November 2024 and March 2026."*

Gloucester County Amateur Radio Club
Board of Directors Meeting Minutes
Wednesday, July 15, 2020

Meeting opened @ 1918 Hours.

Attendance :

- President Jim Clark, KA2OSV
- Vice President Tony Starr, K3TS
- Treasurer Al Arrison, KB2AYU
- Recording Secretary John Zaruba Jr, K2ZA
- Corresponding Secretary Ron Block, NR2B
- Director Jeff Welsh, KD2AZI
- Director Bill Price, NJ2S
- Director Jeff Garth, WB2ZBN
- Director Herb Dyer, KT2Y
- Member John O'Connell, K2QA
- Member Lee Marino, N2LAM
- Member Frank Romeo, N3PUU

Treasurer's Report :

- YTD Income : $2,161
- YTD Expenses : $2,332
- Net : $(170)

Committee Reports :

Clubhouse : Dave Christian KC3VEO was out with a bucket truck to install new satellite antennas. Some additional post-installation work is necessary. Main room air conditioner currently not functioning.

Field Day : Al Arrison KB2AYU reported the event went very well, though some extreme wind gusts damaged some equipment.

Hamfest : Wednesday, July 29, 2020 will be a Hamfest committee meeting. Discussion about food vendor/ no food vendor and it's impact on the operation. Discussion of a COVID action plan.

Old Business : Jim Clark KA2OSV will introduce the dues increase at the September General Membership meeting. **Bill Price NJ2S** will check on the status of the repair of the Club's HF amplifier.

New Business : Tony Starr K3TS solicited feedback on running a Club code class. **Jim Clark KA2OSV** discussed moving the Club picnic to Sunday, October 11, 2020. Discussion of needed generator repair.

Meeting adjourned @ 2035 Hours.

Respectfully submitted,
John Zaruba Jr, K2ZA
Recording Secretary

August Birthdays

Congratulations to our members who are celebrating their birthday this month

Dave Christian, KB3VEO
Harry Jackson, WB2GSF **(President 1982)**
Dan McCormick III, KD2TUS
Curtis Myers, K2CWM
Jon Pearce, WB2MNF
Adam Sigmund
Harry Strahlendorf Jr, W3DNQ
Leonid Surnin, W2/UT5ZF
Brett Waller, K2BKW

In Memoriam - August Birthdays

Silent Keys :
Paul Bergstrom, N2GIB
James Bray Sr, N2AKI
Edward Bubelis, N2LCN
Vernon Byrd, N2DRD
Edward Egolf, WA2ZMS
Charles Emmel Sr, KT2ZZ
Steven Fidler III, N2GVR
Richard Fitch, WA2YLC
Thomas Gordon Sr, KB2GI **(President 1985)**
Seth Horen, K1LOM
John Koch Jr, K2CR
John Lachenmayer, KB2RGX
James Mollica Sr, K2OWE
Bruce Painter, N2ASN
Charles Pennington, K3NMF
Salvatore Scibilia, WA2LKF
Rev James Thompson III, N2EDK

"The big thing about being in a club and being a "Ham" is to help each other when there is a need "
- WB2VFJ

Crosstalk Submissions

This is your Club Newsletter. Make use of it.

If you have stories or photos of your hobby that you would like to share with the Club, please do so!

We will keep covering all of the GCARC events, but it is also nice to get those personal perspectives to include in every issue. Connecting through experiences is what makes the Gloucester County Amateur Radio Club a *REAL* Club.

All submissions, queries, comments and editorials should be addressed to Jeffrey Garth, WB2ZBN at jeff <*dot*> garth <*at*> comcast <*dot*> net.

Submission deadline for the September 2020 issue : Thursday, August 20, 2020

Club Website www.w2mmd.org
Club E-Mail Reflector: GCARC <*at*> Mailman <*dot*> QTH <*dot*> Net

August Contest Calendar

WA7BNM Contest Calendar : www.contestcalendar.com

August 2020	
Batavia FT8 Contest	0000Z, Aug 1 to 2359Z, Aug 2
10-10 Int. Summer Contest, SSB	0001Z, Aug 1 to 2359Z, Aug 2
European HF Championship	1200Z-2359Z, Aug 1
WAB 144 MHz Low Power Phone	1400Z-1800Z, Aug 1
RTTYOPS Weekend Sprint	1600Z-1959Z, Aug 1
ARRL 222 MHz and Up Distance Contest	1800Z, Aug 1 to 1800Z, Aug 2
North American QSO Party, CW	1800Z, Aug 1 to 0559Z, Aug 2
SARL HF Phone Contest	1400Z-1700Z, Aug 2
Worldwide Sideband Activity Contest	0100Z-0159Z, Aug 4
ARS Spartan Sprint	0100Z-0300Z, Aug 4
RTTYOPS Weeksprint	1700Z-1900Z, Aug 4
Phone Fray	0230Z-0300Z, Aug 5
CWops Mini-CWT Test	1300Z-1400Z, Aug 5
VHF-UHF FT8 Activity Contest	1700Z-2000Z, Aug 5
CWops Mini-CWT Test	1900Z-2000Z, Aug 5
CWops Mini-CWT Test	0300Z-0400Z, Aug 6
RTTYOPS Weeksprint	1700Z-1900Z, Aug 6
NRAU 10m Activity Contest	1800Z-1900Z, Aug 6 (CW) and 1900Z-2000Z, Aug 6 (SSB) and 2000Z-2100Z, Aug 6 (FM) and 2100Z-2200Z, Aug 6 (Dig)
SKCC Sprint Europe	1900Z-2100Z, Aug 6
QRP Fox Hunt	0100Z-0230Z, Aug 7
NCCC RTTY Sprint	0145Z-0215Z, Aug 7
NCCC Sprint	0230Z-0300Z, Aug 7
WAE DX Contest, CW	0000Z, Aug 8 to 2359Z, Aug 9
QRP ARCI European Sprint	0800Z-1100Z, Aug 8
SKCC Weekend Sprintathon	1200Z, Aug 8 to 2400Z, Aug 9
Maryland-DC QSO Party	1400Z, Aug 8 to 0400Z, Aug 9
RTTYOPS Weekend Sprint	1600Z-1959Z, Aug 8
4 States QRP Group Second Sunday Sprint	0000Z-0200Z, Aug 10
SARL Youth Sprint	1200Z-1400Z, Aug 10
Worldwide Sideband Activity Contest	0100Z-0159Z, Aug 11
MMMonVHF/DUBUS 144 MHz Meteorscatter Sprint Contest	1500Z, Aug 11 to 1459Z, Aug 13
RTTYOPS Weeksprint	1700Z-1900Z, Aug 11
NAQCC CW Sprint	0030Z-0230Z, Aug 12
Phone Fray	0230Z-0300Z, Aug 12
CWops Mini-CWT Test	1300Z-1400Z, Aug 12
VHF-UHF FT8 Activity Contest	1700Z-2000Z, Aug 12
CWops Mini-CWT Test	1900Z-2000Z, Aug 12
CWops Mini-CWT Test	0300Z-0400Z, Aug 13
RTTYOPS Weeksprint	1700Z-1900Z, Aug 13
QRP Fox Hunt	0100Z-0230Z, Aug 14
NCCC RTTY Sprint	0145Z-0215Z, Aug 14
NCCC Sprint	0230Z-0300Z, Aug 14
SARTG WW RTTY Contest	0000Z-0800Z, Aug 15 and 1600Z-2400Z, Aug 15 and 0800Z-1600Z, Aug 16
ARRL 10 GHz and Up Contest	0600 local, Aug 15 to 2400 local, Aug 16
Russian District Award Contest	0800Z, Aug 15 to 0800Z, Aug 16
Keyman's Club of Japan Contest	1200Z, Aug 15 to 1200Z, Aug 16
Feld Hell Sprint	1600Z-1759Z, Aug 15
North American QSO Party, SSB	1800Z, Aug 15 to 0559Z, Aug 16
CVA DX Contest, CW	2100Z, Aug 15 to 2100Z, Aug 16
SARL HF Digital Contest	1400Z-1700Z, Aug 16

August Contest Calendar - Continued on page 43

August Contest Calendar

WA7BNM Contest Calendar : www.contestcalendar.com

August Contest Calendar - Continued from page 42

NJQRP Skeeter Hunt	1700Z-2100Z, Aug 16
ARRL Rookie Roundup, RTTY	1800Z-2359Z, Aug 16
Run for the Bacon QRP Contest	2300Z, Aug 16 to 0100Z, Aug 17
Worldwide Sideband Activity Contest	0100Z-0159Z, Aug 18
RTTYOPS Weeksprint	1700Z-1900Z, Aug 18
Phone Fray	0230Z-0300Z, Aug 19
CWops Mini-CWT Test	1300Z-1400Z, Aug 19
CWops Mini-CWT Test	1900Z-2000Z, Aug 19
CWops Mini-CWT Test	0300Z-0400Z, Aug 20
RTTYOPS Weeksprint	1700Z-1900Z, Aug 20
QRP Fox Hunt	0100Z-0230Z, Aug 21
NCCC RTTY Sprint	0145Z-0215Z, Aug 21
NCCC Sprint	0230Z-0300Z, Aug 21
Hawaii QSO Party	0400Z, Aug 22 to 0400Z, Aug 24
RTTYOPS Weekend Sprint	1600Z-1959Z, Aug 22
Ohio QSO Party	1600Z, Aug 22 to 0400Z, Aug 23
CVA DX Contest, SSB	2100Z, Aug 22 to 2100Z, Aug 23
50 MHz Fall Sprint	2300Z, Aug 22 to 0300Z, Aug 23
Worldwide Sideband Activity Contest	0100Z-0159Z, Aug 25
RTTYOPS Weeksprint	1700Z-1900Z, Aug 25
SKCC Sprint	0000Z-0200Z, Aug 26
Phone Fray	0230Z-0300Z, Aug 26
CWops Mini-CWT Test	1300Z-1400Z, Aug 26
CWops Mini-CWT Test	1900Z-2000Z, Aug 26
CWops Mini-CWT Test	0300Z-0400Z, Aug 27
RTTYOPS Weeksprint	1700Z-1900Z, Aug 27
QRP Fox Hunt	0100Z-0230Z, Aug 28
NCCC RTTY Sprint	0145Z-0215Z, Aug 28
NCCC Sprint	0230Z-0300Z, Aug 28
Feld Hell Sprint	0000Z-2359Z, Aug 29
ALARA Contest	0600Z Aug 29 to 0559Z, Aug 30
World Wide Digi DX Contest	1200Z, Aug 29 to 1200Z, Aug 30
YO DX HF Contest	1200Z, Aug 29 to 1200Z, Aug 30
W/VE Islands QSO Party	1200Z, Aug 29 to 0300Z, Aug 30
Kentucky State Parks on the Air	1400Z-2200Z, Aug 29
Kansas QSO Party	1400Z, Aug 29 to 0200Z, Aug 30 and 1400Z-2000Z, Aug 30
RTTYOPS Weekend Sprint	1600Z-1959Z, Aug 29
SARL HF CW Contest	1400Z-1700Z, Aug 30
QCX Challenge	1300Z-1400Z, Aug 31
QCX Challenge	1900Z-2000Z, Aug 31

w2mmd.org

www.facebook.com/W2MMD

twitter.com/w2mmd_gcarc

Facebook

Club Committees

Standing Committees	Committee Chairs
Membership and Publicity	**Bob Fields, KC6AOH**
Hamfest	**Sheldon Parker, K2MEN and Bill Price, NJ2S**
Repeater	**Herb Dyer, KT2Y**
Hospitality	**Jeffrey Garth, WB2ZBN**
W2MMD Clubhouse Site	**Al Arrison, KB2AYU**
Field Day	**Al Arrison, KB2AYU**
Nominations	**Jim Clark Sr, KA2OSV**
Health, Welfare, & Silent Keys	**Bill Price, NJ2S**
Budget	**Al Arrison, KB2AYU**
Constitution and By-Laws	**Ron Block, NR2B**
Membership Badges	**Chuck Colabrese, WA2TML**

Activity Committees	Committee Chairs
GC-ARES Emergency Coordinator	**Karl Frank, W2KBF**
GC-RACES Emergency Coordinator	**Walter Seitz Jr, KB2JCG**
Club Publications	**Jeffrey Garth, WB2ZBN**
License Testing/VEC Liaison	**Gary Reed, N2QEE**
Programs	**Tony Starr, K3TS**
Membership Roster Database	**Jeffrey Garth, WB2ZBN**
Club Historian	**Jeffrey Garth, WB2ZBN**
GCARC Family Picnic	**Laurie Love, KD2EYW**
Foxhunts	**Jim Wright, N2GXJ**
W2MMD License Trustee	**Darrell Neron, AB2E**
Contests and Nets	**Tony Starr, K3TS**
Holiday Dinner Party	**Jennifer Robinson, KD2EYR**
W2MMD Special Event Station	**Mark Gottlieb, KK2L**

GCARC <*at*> Mailman <*dot*> QTH <*dot*> Net e-mail reflector guidelines

1.**No attachments** (e.g. pictures, files) are allowed on the reflector.

2.If you have Club-related pictures that you would like to share, you can send them to the webmaster, he will put them on the website and he will send out a general e-mail to all the members.

3.Otherwise, the pictures will have to be sent to the members' addresses.

4.URLs/Hyperlinks are acceptable on the reflector.

5.Do not send any messages with e-mail addresses in the **BCC** (**Blind Carbon Copy**) field. The message will be rejected. Use only the **To:** or **CC:** fields.

6.Members are subscribed to the reflector using the member's e-mail address from the roster database. You must use that address when sending an e-mail via the reflector.

7.If you use another address on the reflector, the message will get rejected or "*bounced*", because the reflector does not recognize that address.

8.Whenever a message sent to reflector is rejected or *"bounced"* for various reasons, the administrator has to log-in to the Mailman.QTH website and approve the message. If the admin recognizes the address as belonging to a Club member, the message is accepted and passed on to the reflector.

FYI...If you use Comcast e-mail, you are limited to 100 addresses per message.
For more information about the e-mail reflector, goto : **www.mailman.qth.net**

The W2MMD Repeaters

2 Meter Repeater
Output : 147.180 MHz
Input : 147.780 MHz
Offset : +600 kHz - PL : 131.8 Hz
(Conventional FM plus C4FM Capability)
EchoLink : W2MMD-R

70 cm Repeater
Output : 442.100 MHz
Input : 447.100 MHz
Offset : +5 MHz - PL : 131.8 Hz
(Conventional FM plus C4FM Capability)

The above 2 repeaters are all
located in Pitman, NJ
GPS : 39.728481°, -75.131088°

1.25 Meter Repeater
Output : 224.660 MHz
Input : 223.060 MHz
Offset : -1.6 MHz - PL : 131.8 Hz
Location : Sewell, NJ
GPS : 39.746738°, -75.077094°

SKYWARN™ Net
Sunday @ 1945 : 147.180 MHz Repeater

Gloucester County ARES/RACES Net
Sunday @ 2000 : 147.180 MHz Repeater

10 Meter Rag Chew Net
Every Monday @ 2000 Hours
Tune-In on 28.465 MHz or 28.475 MHz

2 Meter Rag Chew Net
Every Thursday @ 2000 Hours
Tune-In on the 147.180 MHz Repeater

10 Meter Swap Meet
2nd Saturday of the Month @ 2000 Hours
Check-in on 28.465 MHz or 28.475 MHz

Meeting Calendar

General Membership
ZOOM Meeting
Wednesday, August 5, 2020 @ 1930 Hours

Board of Directors Meeting
Wednesday, August 19, 2020 @ 1900 Hours
***** In-Person or On-Line via ZOOM *****
(All members are welcome)

August 5, 2020
General Membership
ZOOM Meeting

Sheldon Parker, K2MEN will be asking for volunteers for the 2020 Hamfest

***** Badges *****

Need a new or replacement badge
Contact "The BadgeMan"

Chuck Colabrese, WA2TML
colabrese <*at*> comcast <*dot*> net

Question Pool Answers : G3C08:A; G3C09:B; G3C10:B; G3C11:D; G4A01:B; G4A02:C; G4A03:C; G4A04:B; G4A05:C; G4A06:C; G4A07:D; G4A08:D